MACKS Loader

WHEEL LOADER

POWER BUILT FOR PERFORMANCE

POWERFUL, VERSATILE AND ENGINEERED
FOR DEMANDING PROFESSIONAL



L1825

MACHINE + ATTACHMENTS

PROFESSIONAL POWER.INTELLIGENT CONTROL.

A machine for every season. Attachments for every job.

25 HP	25+25 L/MIN	9 KM/H	1,850 KG
KUBOTA DIESEL	HYDRAULIC FLOW*	TOP SPEED	OPERATING WEIGHT
Kubota	rexroth		

L1825

Engine
Make..... KUBOTA
Model.....1105
Cylinders.....3
Fuel type.....DIESEL
Cylinder volume cm^3.....1123
Cooling system.....FLUID

Power
SAE, gross power kW/hp.....18.2/24.8
At engine speed r/min.....2200

Service volumes
Engine oil.....4.4L
Fuel tank.....35L
Hydraulic tank.....45L
Hydraulic system total volume.....50L

Performance
Lifting power hydraulic kg 1800
Tear-out force kg 1650
Tipping load,straight kg.....1000
Tipping load,articulated kg 800
Operating weight kg.....1850
Drive speed km/h 0-9
Pulling force kg 1200

Hydraulic system
Working hydraulics l/min .....25+25
System pressure bar.....180
Drivetrain hydraulics l/min.....54
Drivetrain max system pressure bar.....280

Cycle times
Raising boom s.....3.7
Lowering boom s.....2.2
Folding in bucket s.....2.6
Tipping bucket s.....1.6

Tires
Dimension 23x8.5-12



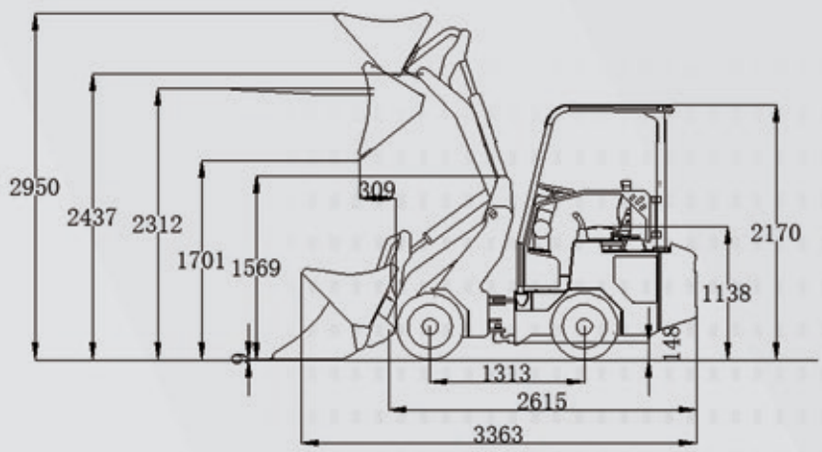

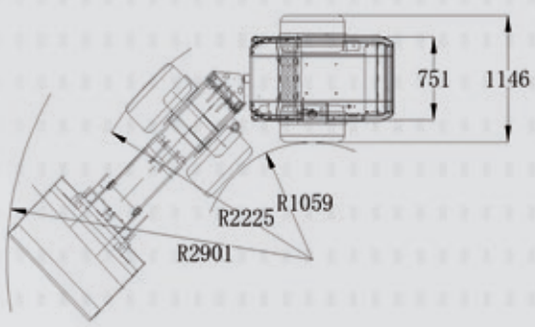

TYRES



23x8.50-12 | 23x10.50-12 | 24x13-12

SHANDONG OUJIN ENGINEERING MACHINERY CO.,LTD.
Add: Shandong Qingzhou Caterpillar Industrial Park
Web: www.macksloaders.com
E-mail: macks-sales@eougem.com

MACKS Loader

TELESCOPIC LOADER

POWER BUILT FOR PERFORMANCE

POWERFUL, VERSATILE AND ENGINEERED FOR DEMANDING PROFESSIONAL



T1825

MACHINE + ATTACHMENTS

PROFESSIONAL POWER.INTELLIGENT CONTROL.

A machine for every season. Attachments for every job.

25 HP	25+25 L/MIN	9 KM/H	1,950 KG
KUBOTA DIESEL	HYDRAULIC FLOW*	TOP SPEED	OPERATING WEIGHT
Kubota	rexroth		

MACKS Loader

EOUGEM

T1825

Engine
Make.....KUBOTA
Model.....1105
Cylinders.....3
Fuel type.....DIESEL
Cylinder volume cm^3.....1123
Cooling system.....FLUID

Power
SAE, gross power kW/hp.....18.2/24.8
At engine speed r/min.....2200

Service volumes
Engine oil.....4.4L
Fuel tank.....35L
Hydraulic tank.....45L
Hydraulic system total volume.....50L

Performance
Lifting power hydraulic kg 1730
Tear-out force kg 1520
Tipping load,straight kg.....1000
Tipping load,articulated kg 800
Operating weight kg.....1950
Drive speed km/h 0-9
Pulling force kg 1200

Hydraulic system
Working hydraulics l/min .....25+25
System pressure bar.....180
Drivetrain hydraulics l/min.....54
Drivetrain max system pressure bar.....280

Cycle times
Raising boom s.....3.7
Lowering boom s.....2.2
Folding in bucket s.....2.6
Tipping bucket s.....1.6

Tires
Dimension 23x8.5-12



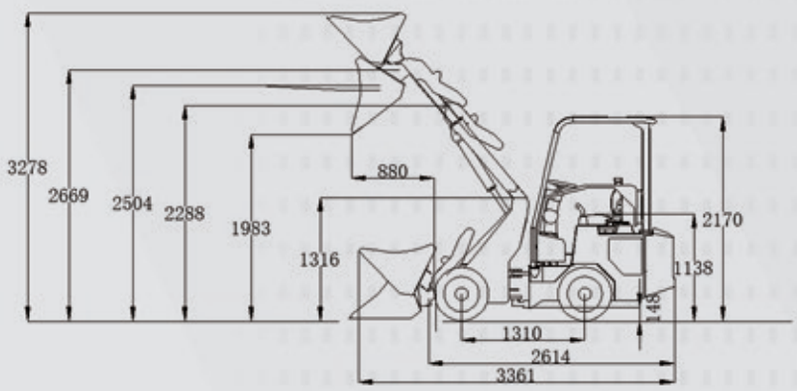

TYRES



23x8.50-12 23x10.50-12 24x13-12

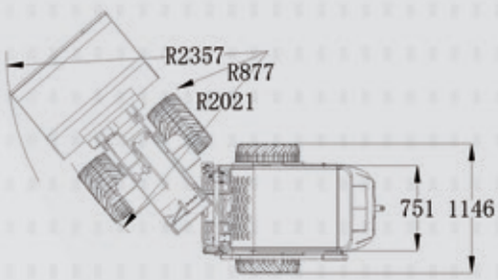

SHANDONG OUJIN ENGINEERING MACHINERY CO.,LTD.
Add: Shandong Qingzhou Caterpillar Industrial Park
Web: www.macksloaders.com
E-mail: macks-sales@eougem.com

MACKS Loader

WHEEL LOADER

POWER BUILT FOR PERFORMANCE

POWERFUL, VERSATILE AND ENGINEERED FOR DEMANDING PROFESSIONAL



L2225

MACHINE + ATTACHMENTS

PROFESSIONAL POWER.INTELLIGENT CONTROL.

A machine for every season. Attachments for every job.

25 HP	37+28 L/MIN	14 KM/H	2,150 KG
KUBOTA DIESEL	HYDRAULIC FLOW*	TOP SPEED	OPERATING WEIGHT
Kubota	rexroth		

MACKS Loader

EOUGEM

L2225

Engine
Make.....KUBOTA
Model.....1505
Cylinders.....4
Fuel type.....DIESEL
Cylinder volume cm^3.....1498
Cooling system.....FLUID

Power
SAE, gross power kW/hp.....18.5/24.8
Max gross torque Nm.....92.6
At engine speed r/min.....1700
Max Motor speed without load r/min 2300

Service volumes
Engine oil.....6L
Fuel tank.....40L
Hydraulic tank.....45L
Hydraulic system total volume.....50L

Performance
Lifting power hydraulic kg 1960
Tear-out force kg 1850
Tipping load,straight kg.....1300
Tipping load,articulated kg 1100
Operating weight kg.....2150
Drive speed km/h 0-7-14
Pulling force kg 1250

Hydraulic system
Working hydraulics l/min .....37+28
System pressure bar.....180
Drivetrain hydraulics l/min.....64
Drivetrain max system pressure bar.....350

Cycle times
Raising boom s.....3.9
Lowering boom s.....2.3
Folding in bucket s.....2.6
Tipping bucket s.....2.0

Tires
Dimension 26x12-12



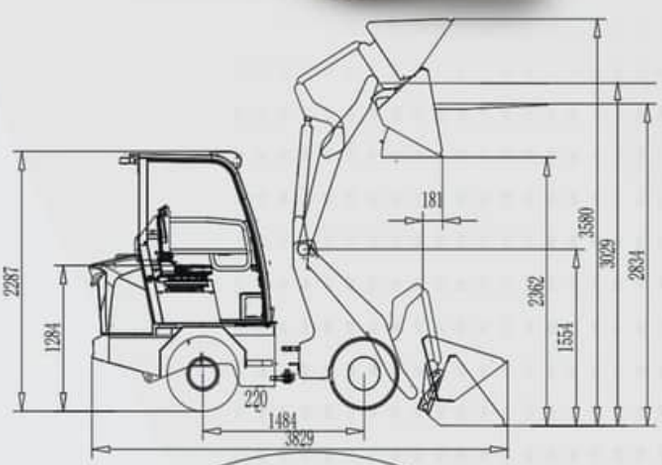

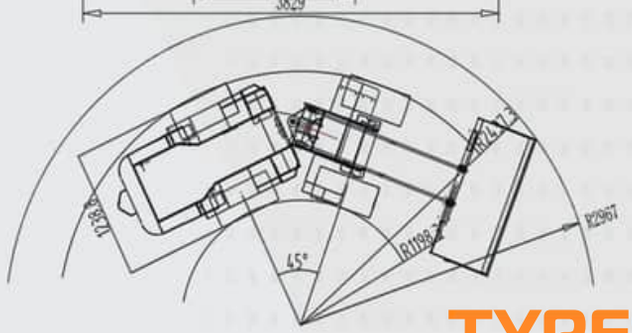

TYRES


27x8.50-15


27x10.5-15


26x12-12


26x11.5-14


29x12.5-15

SHANDONG OUJIN ENGINEERING MACHINERY CO.,LTD.
Add: Shandong Qingzhou Caterpillar Industrial Park
Web: www.macksloaders.com
E-mail: macks-sales@eougem.com

MACKS Loader

TELESCOPIC LOADER

POWER BUILT FOR PERFORMANCE

POWERFUL, VERSATILE AND ENGINEERED
FOR DEMANDING PROFESSIONAL



T2225

MACHINE + ATTACHMENTS

PROFESSIONAL POWER.INTELLIGENT CONTROL.

A machine for every season. Attachments for every job.

25 HP	37+28 L/MIN	14 KM/H	2,220 KG
KUBOTA DIESEL	HYDRAULIC FLOW*	TOP SPEED	OPERATING WEIGHT
Kubota	rexroth		

MACKS Loader

EOUGEM

T2225

Engine
Make.....KUBOTA
Model.....1505
Cylinders.....4
Fuel type.....DIESEL
Cylinder volume cm^3.....1498
Cooling system.....FLUID

Power
SAE, gross power kW/hp.....18.5/24.8
Max gross torque Nm.....92.6
At engine speed r/min.....1700
Max Motor speed without load r/min 2300

Service volumes
Engine oil.....6L
Fuel tank.....40L
Hydraulic tank.....45L
Hydraulic system total volume.....50L

Performance
Lifting power hydraulic kg 1850
Tear-out force kg 1780
Tipping load,straight kg.....1300
Tipping load,articulated kg 1100
Operating weight kg.....2220
Drive speed km/h 0-7-14
Pulling force kg 1250

Hydraulic system
Working hydraulics l/min .....37+28
System pressure bar.....180
Drivetrain hydraulics l/min.....64
Drivetrain max system pressure bar.....350

Cycle times
Raising boom s.....3.9
Lowering boom s.....2.3
Folding in bucket s.....2.6
Tipping bucket s.....2.0

Tires
Dimension 26x12-12



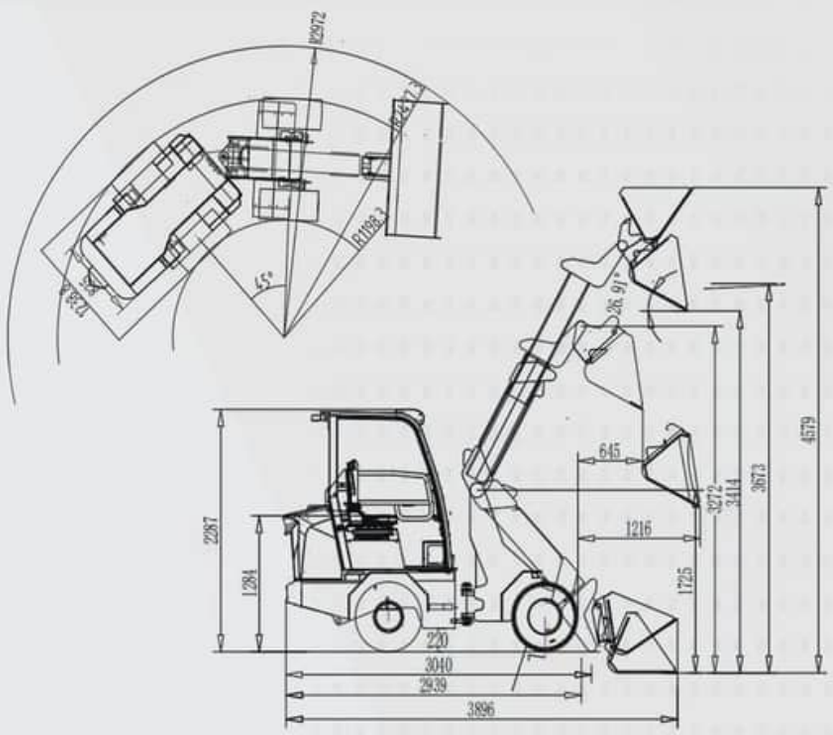

TYRES



27x8.50-15 | 27x10.5-15 | 26x12-12 | 26x11.5-14 | 29x12.5-15

SHANDONG OUJIN ENGINEERING MACHINERY CO.,LTD.
Add: Shandong Qingzhou Caterpillar Industrial Park
Web: www.macksloaders.com
E-mail: macks-sales@eougem.com

MACKS Loader

WHEEL LOADER

POWER BUILT FOR PERFORMANCE

POWERFUL, VERSATILE AND ENGINEERED FOR DEMANDING PROFESSIONAL



L2325

MACHINE + ATTACHMENTS

PROFESSIONAL POWER.INTELLIGENT CONTROL.

A machine for every season. Attachments for every job.

23 HP	72.8 L/MIN	20 KM/H	2,250 KG
YANMAR TURBO DIESEL	HYDRAULIC FLOW*	TOP SPEED	OPERATING WEIGHT
YANMAR	rexroth		

MACKS Loader

EOUGEM

SPECIFICATION	VALUE
ENGINE	
Make	YANMAR
Model	3TNV80FT
Cylinders	3
Fuel type	Diesel
Cylinder volume	1267cm³
SPECIFICATIONS	Electronic Contrdled Turbo-Charge
POWER	
SAE gross power	17.3kW
At engine speed	2600 r/min
SERVICE VOLUMES	
Engine oil	4.4 L
Fuel tank	38 L
Hydraulic tank	35 L
Hydraulic system total volume	45 L
PERFORMANCE	
Hydraulic lifting power	2200 kg
Tear-out force	1510 kg
Tipping load, straight	1350 kg
Tipping load, articulated	1050 kg
Operating weight	2250kg
Drive speed	0-20km/h
Pulling force	1500 kg
HYDRAULIC SYSTEM	
Working hydraulics	72.8 l/min
System pressure	230 bar
Pump type	Variable Piston Pump
Drivetrain hydraulics	83l/min
CYCLE TIMES	
Raising boom	3.2 s
Lowering boom	2.0 s
Folding in bucket	2.8 s
Tipping bucket	1.3 s
TYRES	
Dimension	26x12-12



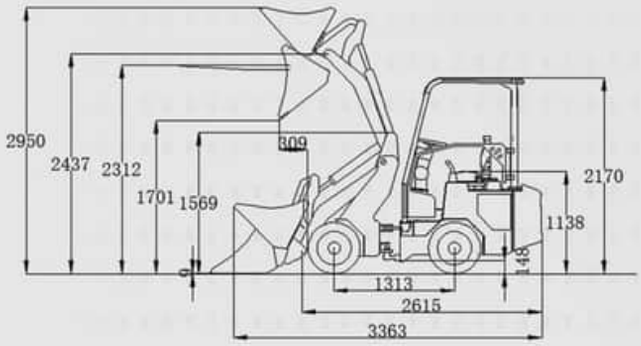

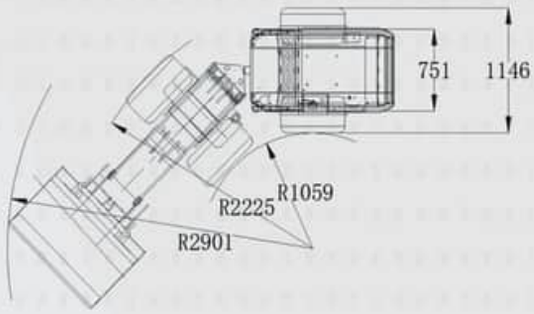

TYRES


27x8.50-15


27x10.5-15


26x12-12


26x11.5-14

SHANDONG OUJIN ENGINEERING MACHINERY CO.,LTD.

Add: Shandong Qingzhou Caterpillar Industrial Park

Web: www.miniwheelloader.com

E-mail: macks-sales@eougem.com

MACKS Loader

TELESCOPIC LOADER

POWER BUILT FOR PERFORMANCE

POWERFUL, VERSATILE AND ENGINEERED FOR DEMANDING PROFESSIONAL



T2325HD

MACHINE + ATTACHMENTS

PROFESSIONAL POWER.INTELLIGENT CONTROL.

A machine for every season. Attachments for every job.

23 HP	72.8 L/MIN	20 KM/H	2,350 KG
YANMAR TURBO DIESEL	HYDRAULIC FLOW*	TOP SPEED	OPERATING WEIGHT
YANMAR	rexroth		

MACKS Loader

EOUGEM

SPECIFICATION	VALUE
ENGINE	
Make	YANMAR
Model	3TNV80FT
Cylinders	3
Fuel type	Diesel
Cylinder volume	1267cm³
SPECIFICATIONS	Electronic Contrdled Turbo-Charge
POWER	
SAE gross power	17.3kW
At engine speed	2600 r/min
SERVICE VOLUMES	
Engine oil	4.4 L
Fuel tank	38 L
Hydraulic tank	45 L
Hydraulic system total volume	50 L
PERFORMANCE	
Hydraulic lifting power	2200 kg
Tear-out force	1510 kg
Tipping load, straight	1350 kg
Tipping load, articulated	1050 kg
Operating weight	2350 kg
Drive speed	0-20km/h
Pulling force	1500 kg
HYDRAULIC SYSTEM	
Working hydraulics	72.8 l/min
System pressure	230 bar
Pump type	Variable Piston Pump
Drivetrain hydraulics	83l/min
CYCLE TIMES	
Raising boom	3.2 s
Lowering boom	2.0 s
Folding in bucket	2.8 s
Tipping bucket	1.3 s
TYRES	
Dimension	26x12-12



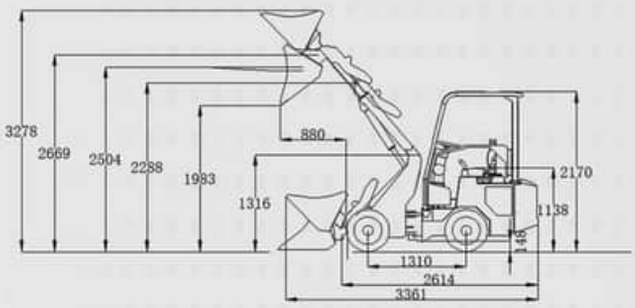

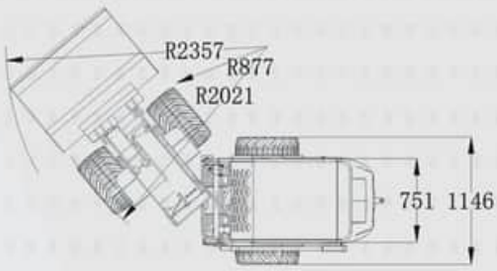

TYRES


27x8.50-15


27x10.5-15


26x12-12


26x11.5-14

SHANDONG OUJIN ENGINEERING MACHINERY CO.,LTD.

Add: Shandong Qingzhou Caterpillar Industrial Park

Web: www.miniwheelloader.com

E-mail: macks-sales@eougem.com

MACKS Loader

WHEEL LOADER

POWER BUILT FOR PERFORMANCE

POWERFUL, VERSATILE AND ENGINEERED FOR DEMANDING PROFESSIONAL



L2745

MACHINE + ATTACHMENTS

PROFESSIONAL POWER.INTELLIGENT CONTROL.

A machine for every season. Attachments for every job.

43 HP	60+36 L/MIN	20(25) KM/H	2,780 KG
YANMAR DIESEL	HYDRAULIC FLOW*	TOP SPEED	OPERATING WEIGHT
YANMAR	rexroth		

L2745

Engine
Make.....YANMAR
Model.....3TNV86T
Cylinders.....3
Fuel type.....DIESEL
Cylinder volume cm^3.....1568
Cooling system.....FLUID

Power
SAE, gross power kW/hp.....32.4/43.7
Max gross torque Nm.....128.9
At engine speed r/min.....1950
Max Motor speed without load r/min 3000

Service volumes
Engine oil.....6L
Fuel tank.....60L
Hydraulic tank.....55L
Hydraulic system total volume.....60L

Performance
Lifting power hydraulic kg 2850
Tear-out force kg 2700
Tipping load,straight kg.....1800
Tipping load,articulated kg 1500
Operating weight kg.....2980
Drive speed km/h .....0-20(25)
Pulling force kg 2400

Hydraulic system
Working hydraulics l/min .....60+36
System pressure bar.....180
Drivetrain hydraulics l/min.....120
Drivetrain max system pressure bar.....450

Cycle times
Raising boom s.....3.8
Lowering boom s.....2.2
Folding in bucket s.....2.6
Tipping bucket s.....2.0

Tires
Dimension 31X15.5-15



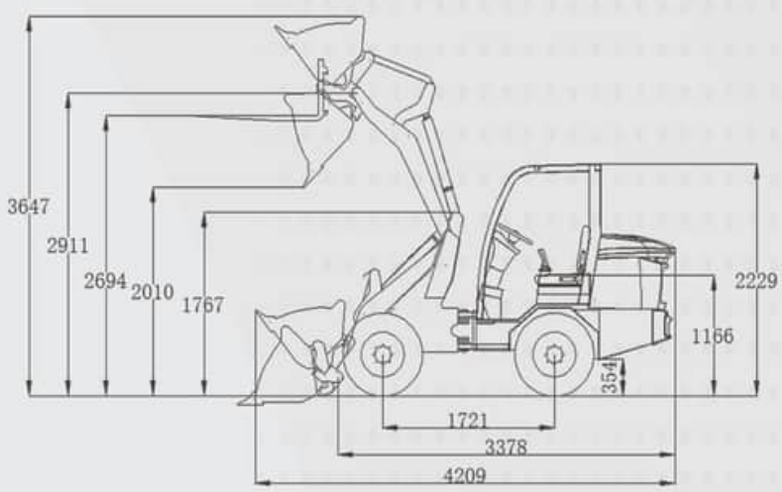

TYRES



31x13.5-15 Multi Trac	15.0/55-17 AS	19.0/45-17 AS	19.0/45-17 Allground
350 / 760	390 / 860	440 / 880	440 / 880

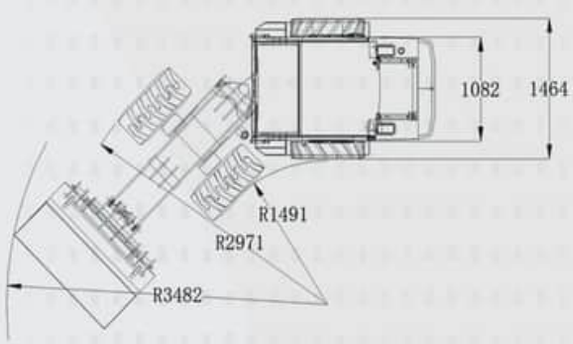

SHANDONG OUJIN ENGINEERING MACHINERY CO.,LTD.
Add: Shandong Qingzhou Caterpillar Industrial Park
Web: www.miniwheelloader.com
E-mail: macks-sales@eougem.com

MACKS Loader

TELESCOPIC LOADER

POWER BUILT FOR PERFORMANCE

POWERFUL, VERSATILE AND ENGINEERED FOR DEMANDING PROFESSIONAL



T2745

MACHINE + ATTACHMENTS

PROFESSIONAL POWER.INTELLIGENT CONTROL.

A machine for every season. Attachments for every job.

43 HP	60+48 L/MIN	20(25) KM/H	3,080 KG
YANMAR DIESEL	HYDRAULIC FLOW*	TOP SPEED	OPERATING WEIGHT
YANMAR	rexroth		

MACKS Loader

EOUGEM

T2745

Engine
Make.....YANMAR
Model.....3TNV86T
Cylinders.....3
Fuel type.....DIESEL
Cylinder volume cm^3.....1568
Cooling system.....FLUID

Power
SAE, gross power kW/hp.....32.4/43.7
Max gross torque Nm.....128.9
At engine speed r/min.....1950
Max Motor speed without load r/min 3000

Service volumes
Engine oil.....6L
Fuel tank.....60L
Hydraulic tank.....55L
Hydraulic system total volume.....60L

Performance
Lifting power hydraulic kg 2680
Tear-out force kg 2570
Tipping load,straight kg.....1800
Tipping load,articulated kg 1500
Operating weight kg.....3080
Drive speed km/h .....20(25)
Pulling force kg 2400

Hydraulic system
Working hydraulics l/min .....60+48
System pressure bar.....180
Drivetrain hydraulics l/min.....120
Drivetrain max system pressure bar.....450

Cycle times
Raising boom s.....4.8
Lowering boom s.....3.6
Folding in bucket s.....3.2
Tipping bucket s.....3.0

Tires
Dimension 31X15.5-15



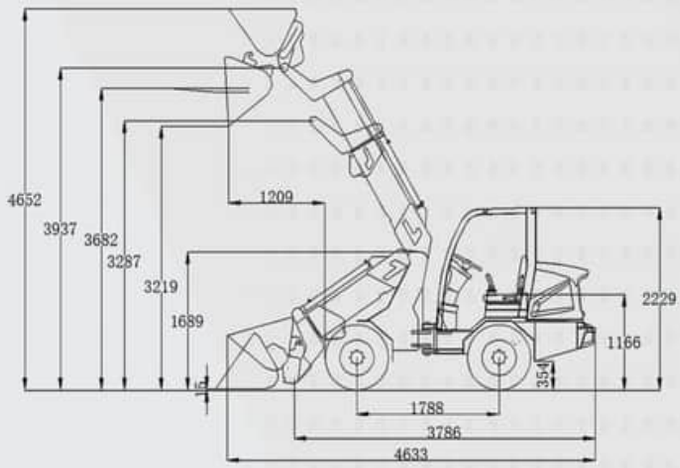

TYRES



31x15.5-15 AS	31x13.5-15 Multi Trac	31x13.5-15 Allground	33x15.5-16.5 SKD
400 / 790	350 / 760	350 / 760	395 / 840

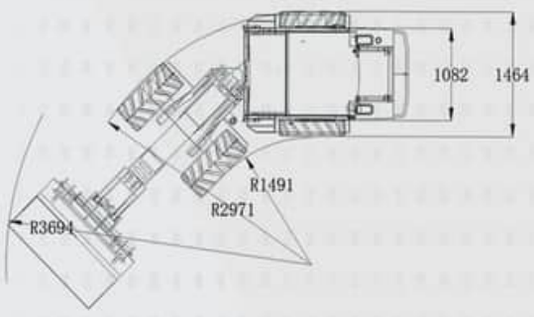

SHANDONG OUJIN ENGINEERING MACHINERY CO.,LTD.
Add: Shandong Qingzhou Caterpillar Industrial Park
Web: www.macksloaders.com
E-mail: macks-sales@eougem.com

MACKS Loader

WHEEL LOADER

POWER BUILT FOR PERFORMANCE

POWERFUL, VERSATILE AND ENGINEERED FOR DEMANDING PROFESSIONAL



L3055

MACHINE + ATTACHMENTS

PROFESSIONAL POWER.INTELLIGENT CONTROL.

A machine for every season. Attachments for every job.

54 HP	60+48 L/MIN	30 KM/H	2,980 KG
YANMAR DIESEL	HYDRAULIC FLOW*	TOP SPEED	OPERATING WEIGHT

YANMAR rexroth

MACKS Loader

EOUGEM

L3055

Engine
Make.....3TN86CHT
Model.....3TNV86T
Cylinders.....3
Fuel type.....DIESEL
Cylinder volume cm^3.....1568
Cooling system.....FLUID

Power
SAE, gross power kW/hp.....40.1/54.1
Max gross torque Nm.....197
At engine speed r/min.....1650
Max Motor speed without load r/min 2600

Service volumes
Engine oil.....6L
Fuel tank.....60L
Hydraulic tank.....55L
Hydraulic system total volume.....60L

Performance
Lifting power hydraulic kg 2850
Tear-out force kg 2700
Tipping load,straight kg.....1800
Tipping load,articulated kg 1500
Operating weight kg.....2980
Drive speed km/h 0-15/0-30
Pulling force kg 2400

Hydraulic system
Working hydraulics l/min .....60+48
System pressure bar.....180
Drivetrain hydraulics l/min.....120
Drivetrain max system pressure bar.....450

Cycle times
Raising boom s.....3.8
Lowering boom s.....2.2
Folding in bucket s.....2.6
Tipping bucket s.....2.0

Tires
Dimension 15.0/55-17



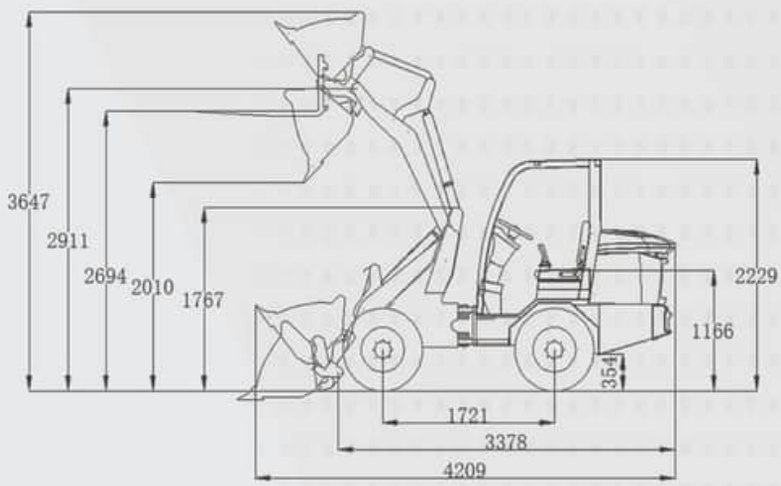

TYRES



31x13.5-15 Multi Trac	15.0/55-17 AS	19.0/45-17 AS	19.0/45-17 Allground
350 / 760	390 / 860	440 / 880	440 / 880

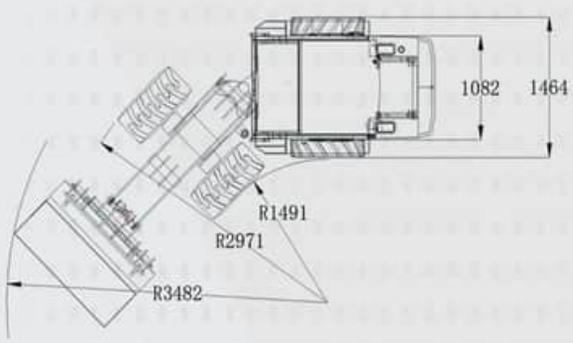

SHANDONG OUJIN ENGINEERING MACHINERY CO.,LTD.
Add: Shandong Qingzhou Caterpillar Industrial Park
Web: www.miniwheelloader.com
E-mail: macks-sales@eougem.com

MACKS Loader

TELESCOPIC LOADER

POWER BUILT FOR PERFORMANCE

POWERFUL, VERSATILE AND ENGINEERED FOR DEMANDING PROFESSIONAL



T3055

MACHINE + ATTACHMENTS

PROFESSIONAL POWER.INTELLIGENT CONTROL.

A machine for every season. Attachments for every job.

54 HP	60+48 L/MIN	30 KM/H	3,230 KG
YANMAR DIESEL	HYDRAULIC FLOW*	TOP SPEED	OPERATING WEIGHT
YANMAR	rexroth		

T3055

Engine
Make.....YANMAR
Model.....3TNV86T
Cylinders.....3
Fuel type.....DIESEL
Cylinder volume cm^3.....1568
Cooling system.....FLUID

Power
SAE, gross power kW/hp.....32.4/43.7
Max gross torque Nm.....128.9
At engine speed r/min.....1950
Max Motor speed without load r/min 3000

Service volumes
Engine oil.....6L
Fuel tank.....60L
Hydraulic tank.....55L
Hydraulic system total volume.....60L

Performance
Lifting power hydraulic kg 2680
Tear-out force kg 2570
Tipping load,straight kg.....1800
Tipping load,articulated kg 1500
Operating weight kg.....3230
Drive speed km/h 0-15/0-30
Pulling force kg 2400

Hydraulic system
Working hydraulics l/min .....60+48
System pressure bar.....180
Drivetrain hydraulics l/min.....120
Drivetrain max system pressure bar.....450

Cycle times
Raising boom s.....4.8
Lowering boom s.....4.2
Folding in bucket s.....3.6
Tipping bucket s.....3.0

Tires
Dimension 15.0/55-17



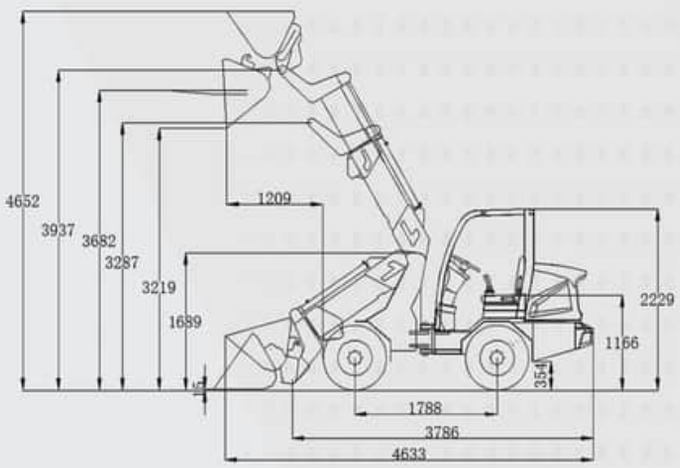

TYRES



31x15.5-15 AS	31x13.5-15 Multi Trac	31x13.5-15 Allground	33x15.5-16.5 SKD
400 / 790	350 / 760	350 / 760	395 / 840

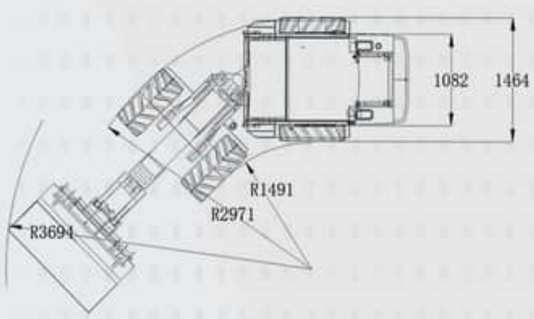

SHANDONG OUJIN ENGINEERING MACHINERY CO.,LTD.
Add: Shandong Qingzhou Caterpillar Industrial Park
Web: www.macksloaders.com
E-mail: macks-sales@eougem.com

MACKS Loader

WHEEL LOADER

POWER BUILT FOR PERFORMANCE

POWERFUL, VERSATILE AND ENGINEERED FOR DEMANDING PROFESSIONAL



L6075

MACHINE + ATTACHMENTS

PROFESSIONAL POWER.INTELLIGENT CONTROL.

A machine for every season. Attachments for every job.

73 HP	94.5 L/MIN	40 KM/H	5,400 KG
YANMAR DIESEL	HYDRAULIC FLOW*	TOP SPEED	OPERATING WEIGHT

YANMAR rexroth

SPECIFICATION	VALUE
ENGINE	
Make	YANMAR
Model	4TNV98CT
Cylinders	
Fuel type	Diesel
Cylinder volume	3318cm³
SPECIFICATIONS	Electronic Common Rail Turbo-Charge
POWER	
SAE gross power	53.7 kw
At engine speed	2100 r/min
SERVICE VOLUMES	
Engine oil	12L
Fuel tank	68L
Hydraulic tank	70 L
Hydraulic system total volume	80L
Operating weight	5400 kg
Drive speed	0-40km/h
Pulling force	2820 kg
HYDRAULIC SYSTEM	
Working hydraulics	94.5 l/min
System pressure	260 bar
Pump type	Variable Piston pump
Drivetrain hydraulics	117.6l/min
TYRES	
Dimension	405/70R20



Machine view



Side dimensions

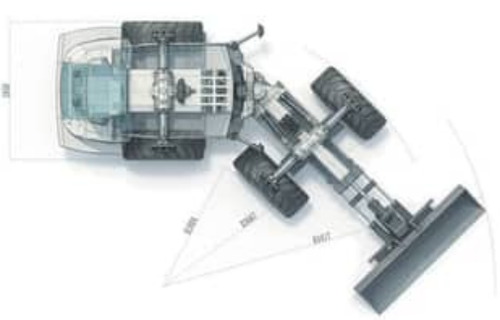

Tyres



400/70-20 AS*** 400/70R20 AS***	18-22.5 AS	500/60-22.5 AS	600/40-22.5 AS***	600/50-22.5 AS
400 / 1,075	445 / 1,175	500 / 1,180	600 / 1,060	600 / 1,180

SHANDONG OUJIN ENGINEERING MACHINERY CO.,LTD.

Add: Shandong Qingzhou Caterpillar Industrial Park

Web: www.miniwheelloader.com

E-mail: macks-sales@eougem.com

MACKS Loader

TELESCOPIC LOADER

POWER BUILT FOR PERFORMANCE

POWERFUL, VERSATILE AND ENGINEERED FOR DEMANDING PROFESSIONAL



T6075

MACHINE + ATTACHMENTS

PROFESSIONAL POWER.INTELLIGENT CONTROL.

A machine for every season. Attachments for every job.

73 HP	94.5 L/MIN	40 KM/H	5,650 KG
YANMAR DIESEL	HYDRAULIC FLOW*	TOP SPEED	OPERATING WEIGHT

YANMAR rexroth

SPECIFICATION	VALUE
ENGINE	
Make	**YANMAR**
Model	**4TNV98CT**
Cylinders	
Fuel type	**Diesel**
Cylinder volume	**3318cm³**
SPECIFICATIONS	**Electronic Common Rail Turbo-Charge**
POWER	
SAE gross power	**53.7 kw**
At engine speed	**2100 r/min**
SERVICE VOLUMES	
Engine oil	**12L**
Fuel tank	**68L**
Hydraulic tank	**70 L**
Hydraulic system total volume	**80L**
Operating weight	**5400 kg**
Drive speed	**0-40km/h**
Pulling force	**2820 kg**
HYDRAULIC SYSTEM	
Working hydraulics	**94.5 l/min**
System pressure	**260 bar**
Pump type	**Variable Piston pump**
Drivetrain hydraulics	**117.6l/min**
TYRES	
Dimension	**405/70R20**



Machine view



Side dimensions



Tyres



400/70-20 AS*** 400/70R20 AS***	18-22.5 AS	500/60-22.5 AS	600/40-22.5 AS***	600/50-22.5 AS
400 / 1,075	445 / 1,175	500 / 1,180	600 / 1,060	600 / 1,180

SHANDONG OUJIN ENGINEERING MACHINERY CO.,LTD.

Add: Shandong Qingzhou Caterpillar Industrial Park

Web: www.miniwheelloader.com

E-mail: macks-sales@eougem.com